BHP3〔BHM3〕

如何订购/ HOW TO ORDER

BH	P	3	前盖 Front cover	旋向 Rotation	规格 Size	轴伸 Shaft	油口 Ports	油口位置 Ports position	油封 Seals	可选项 Options
系列号 Series	P- 齿轮泵 Pump M- 齿轮马达 Motor	组别 Group	B0 B1 A0 A1	D 顺时针转 Clockwise S 逆时针转 Counter clockwise R 可正反转 Reversible	20 22 26 33 39 46 50 52 55 63 71					

可选项/ Options

排油管/ Drain

Q0-内部排油 /internal drain
Q1-外部排油 /external drain G3/8
Q2-外部排油 / external drain 3/4-16 UNF
Q3-外部排油 / external drain G1/4
Q4-外部排油 / external drain 9/16-18 UNF

油口位置	Ports position
省略-侧进侧出	Omit-Side inlet and side outlet
A-前进前出	A-Front inlet and front outlet
B-后进前出	B-Back inlet and front outlet
C-后进侧出	C-Back inlet and side outlet
D-侧进前出	D-Side inlet and front outlet
R-后进后出	R-Back inlet and back outlet

油封	Seals
省略-温度范围在-10℃~+80℃,进油口最高绝对压力为3bar。	Omit-Range between -10℃ and +80℃,inlet pressure up to max. 3 bar absolute.
V-适用于高温介质，温度范围在-10℃~+120℃。	V-Version suitable for fluid at hi-temperatures, range between -10℃ and +120℃.
H-适用于低温介质，温度范围在-40℃~+80℃。	H-Version suitable for fluid at low-temperatures, range between -40℃ and +80℃.
T-适用于进油口最大绝对压力3~6bar。	T-Version suitable for inlet pressure up to max. 3 and 6 bar absolute.
N-适用于进油口最大绝对压力3~10bar。	N-Version suitable for inlet pressure up to max. 3 and 10 bar absolute.

范例/ Examples:

BHP3-B0-D-20-C0-F0 = 顺时针转，排量 20 cc/rev, B0 前盖， C0 圆柱轴伸，F0 安装油口，标准油封
clockwise rotation, 20 cc/rev, B0 front cover, C0 parallel shaft, setting ports F0 type, standard seals

BHP3-B1-D-20-T0-E0 = 顺时针转，排量 20 cc/rev, B1 前盖，T0 1:8锥形轴伸，E0 安装油口，标准油封
clockwise rotation, 20 cc/rev, B1 front cover, 1:8 tapered shaft(T0), setting ports E0 type, standard seals

BHP3-A0-D-20-C2-F4-N= 顺时针转，排量 20 cc/rev, A0 前盖， C2 圆柱轴伸，F4 安装油口,高压油封(N)
clockwise rotation, 20 cc/rev, A0 front cover, C2 parallel shaft, setting ports F4 type, high pressure seals(N)

BHP3B0

M10 螺纹深 18.
M8 螺纹深 16.
安装泵时，n.8 M10 螺钉扭矩设定为47 ± 3 Nm.

M10 thread depth 18.
M8 thread depth 16.
To mount the pump, n.8 M10 screws, with a torque wrench setting fixed at 47 ± 3 Nm.

出油口
OUTLET

进油口
INLET

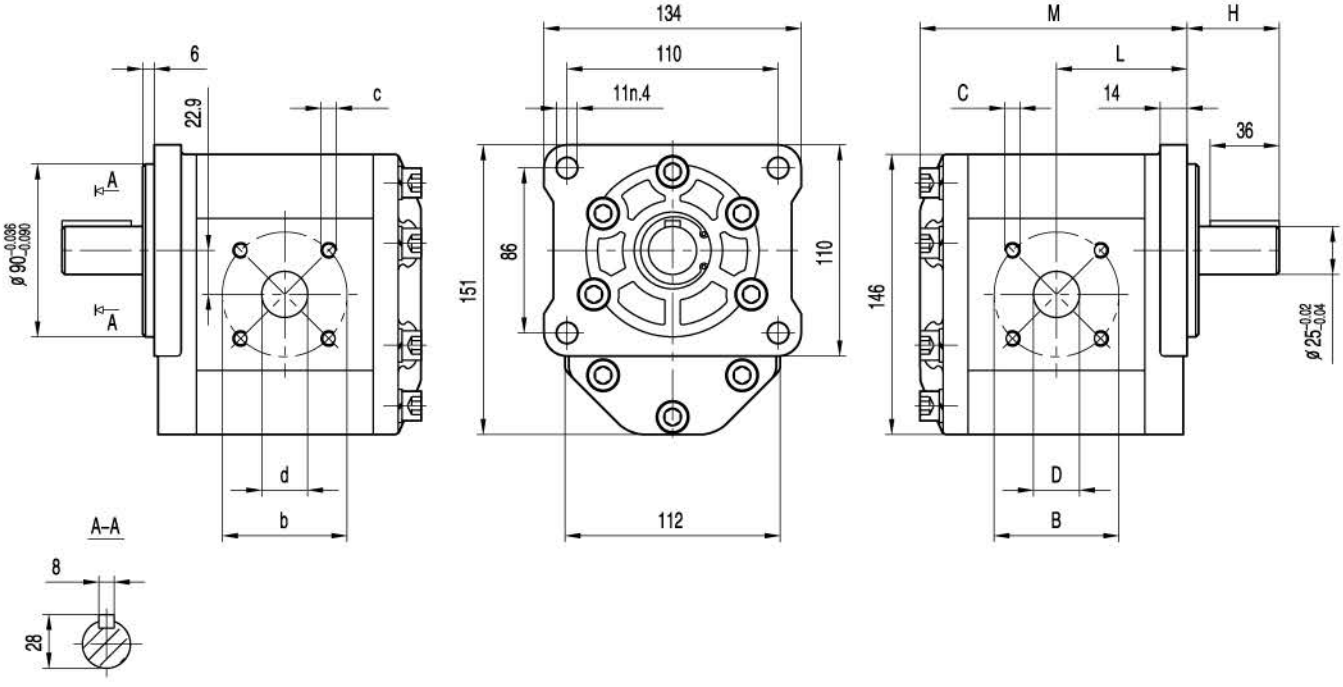

规格 Type	排量 Displacement	最大压力 Max pressure			最高转速 Max. speed	最低转速 Min. speed	尺寸 Dimensions								
		P1	P2	P3			M	L	H	B	D	C	b	d	c
	(cm³/rev)	bar	bar	bar	(r/min)	(r/min)	mm	mm	mm	mm	mm		mm	mm	
BHP3B0-D-20	20	250	265	280	3500	600	128	63	48	50	20	M8	50	16.5	M8
BHP3B0-D-22	22	250	265	280	3500	600	130	64	48	50	20	M8	50	16.5	M8
BHP3B0-D-26	26	250	265	280	3000	600	133	65	48	50	20	M8	50	20	M8
BHP3B0-D-33	33	230	250	270	3000	500	139	68	48	65	25	M8	65	20	M8
BHP3B0-D-39	39	230	250	270	3000	500	146	72	48	65	25	M8	65	20	M8
BHP3B0-D-46	46	230	250	270	3000	500	152	75	48	65	25	M8	65	20	M8
BHP3B0-D-50	50	220	240	260	3000	500	156	77	51	76	33	M10	76	25	M10
BHP3B0-D-52	52	220	240	260	3000	500	158	78	51	76	33	M10	76	25	M10
BHP3B0-D-55	55	200	230	250	2800	400	160	79	51	76	33	M10	76	25	M10
BHP3B0-D-63	63	200	230	250	2800	400	168	83	51	76	33	M10	76	25	M10
BHP3B0-D-71	71	180	200	220	2500	400	175	86	51	76	33	M10	76	25	M10

BHP3B1

M10 螺纹深 18,
安装泵时，n.8 M10 螺钉扭矩设定为 47 ± 3 Nm.
轴伸 M14x1.5 螺母扭矩设定为 80 Nm.

M10 thread depth 18,
To mount the pump, n.8 M10 screws, with a torque wrench setting fixed at 47 ± 3 Nm.
Shaft M14x1.5 nut, with a torque wrench setting fixed at 80 Nm.

出油口
OUTLET

进油口
INLET

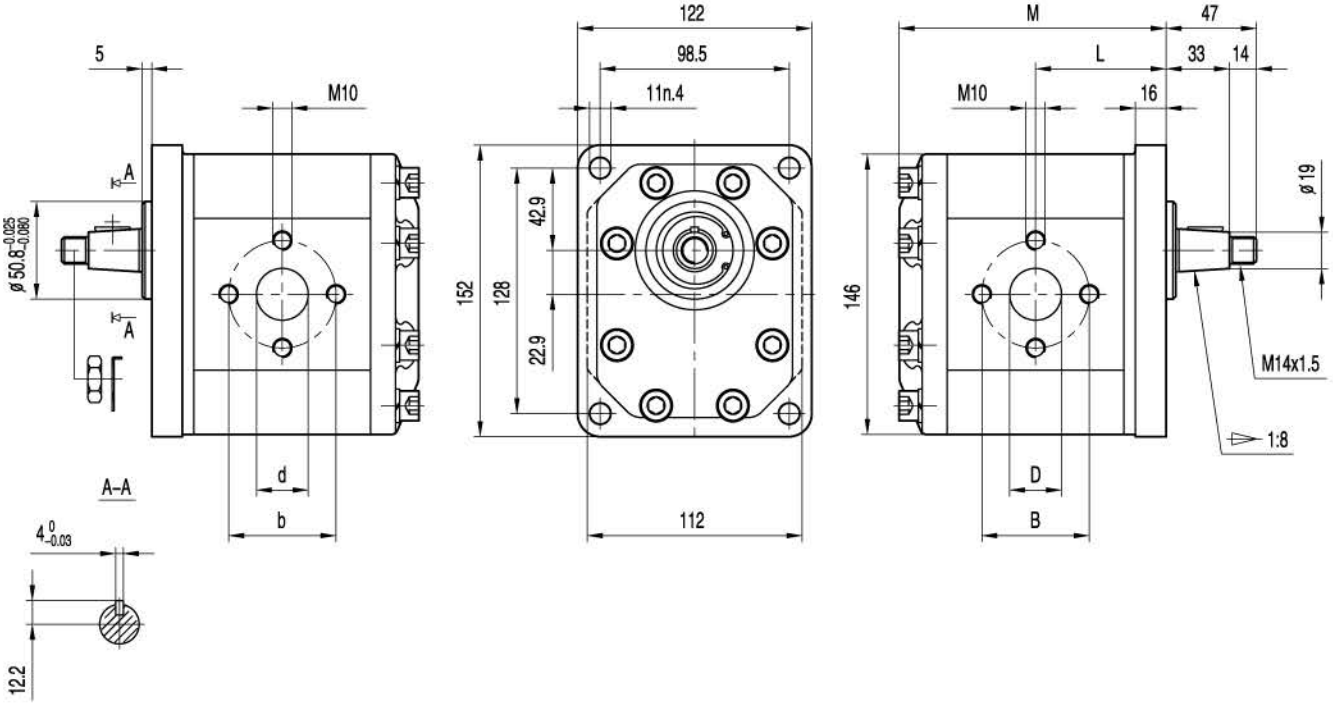

规格 Type	排量 Displacement	最大压力 Max pressure			最高转速 Max. speed	最低转速 Min. speed	尺寸 Dimensions					
		P1	P2	P3			M	L	B	D	b	d
	(cm³/rev)	bar	bar	bar	(r/min)	(r/min)	mm	mm	mm	mm	mm	mm
BHP3B1-D-20	20	250	265	280	3500	600	128	63	56	27	56	19
BHP3B1-D-22	22	250	265	280	3500	600	130	64	56	27	56	19
BHP3B1-D-26	26	250	265	280	3000	600	133	65	56	27	56	19
BHP3B1-D-33	33	230	250	270	3000	500	139	68	56	27	56	19
BHP3B1-D-39	39	230	250	270	3000	500	146	72	56	27	56	19
BHP3B1-D-46	46	230	250	270	3000	500	152	75	51	27	51	27
BHP3B1-D-50	50	220	240	260	3000	500	156	77	56	27	56	27
BHP3B1-D-52	52	220	240	260	3000	500	158	78	56	27	56	27
BHP3B1-D-55	55	200	230	250	2800	400	160	79	62	33	51	27
BHP3B1-D-63	63	200	230	250	2800	400	168	83	62	33	51	27
BHP3B1-D-71	71	180	200	220	2500	400	175	86	62	33	51	27

BHP3A0

3/8–16 UNC 螺纹深 19.
7/16–14UNC 螺纹深 19.
安装泵时，n.8 M10 螺钉扭矩
设定为47 ± 3 Nm.

3/8–16 UNC thread depth 19.
7/16–14 UNC thread depth 19.
To mount the pump, n.8 M10 screws,
with a torque wrench setting fixed
at 47 ± 3 Nm.

出油口
OUTLET

进油口
INLET

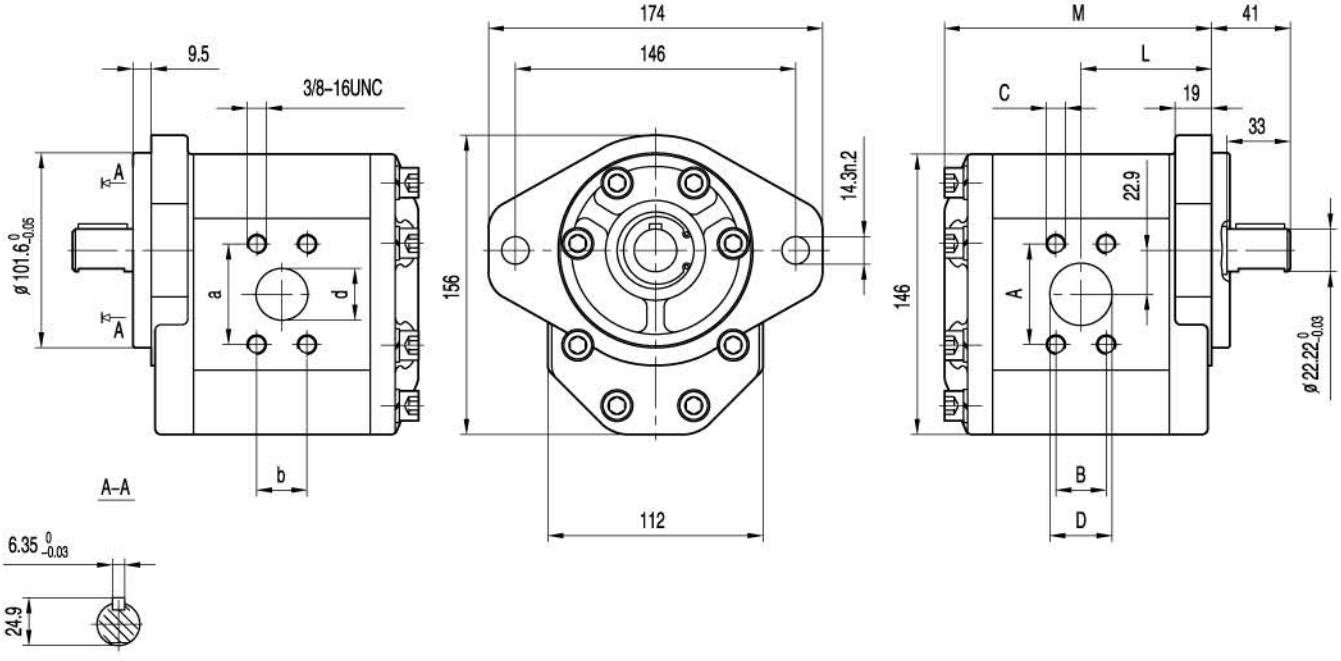

规格 Type	排量 Displacement	最大压力 Max pressure			最高转速 Max. speed	最低转速 Min. speed	尺寸 Dimensions								
		P1	P2	P3			M	L	A	B	C	D	a	b	d
	(cm^3/rev)	bar	bar	bar	(r/min)	(r/min)	mm	mm	mm	mm	UNC	mm	mm	mm	mm
BHP3A0-D-20	20	250	265	280	3500	600	128	63	52.4	26.2	3/8	27	47.6	22.2	19
BHP3A0-D-22	22	250	265	280	3500	600	130	64	52.4	26.2	3/8	27	47.6	22.2	19
BHP3A0-D-26	26	250	265	280	3000	600	133	65	52.4	26.2	3/8	27	47.6	22.2	19
BHP3A0-D-33	33	230	250	270	3000	500	139	68	52.4	26.2	3/8	27	47.6	22.2	19
BHP3A0-D-39	39	230	250	270	3000	500	146	72	52.4	26.2	3/8	27	47.6	22.2	19
BHP3A0-D-46	46	230	250	270	3000	500	152	75	52.4	26.2	3/8	27	47.6	22.2	19
BHP3A0-D-50	50	220	240	260	3000	500	156	77	52.4	26.2	3/8	27	47.6	22.2	19
BHP3A0-D-52	52	220	240	260	3000	500	158	78	52.4	26.2	3/8	27	47.6	22.2	19
BHP3A0-D-55	55	200	230	250	2800	400	160	79	58.7	30.2	7/16	33	52.4	26.2	27
BHP3A0-D-63	63	200	230	250	2800	400	168	83	58.7	30.2	7/16	33	52.4	26.2	27
BHP3A0-D-71	71	180	200	220	2500	400	175	86	58.7	30.2	7/16	33	52.4	26.2	27

BHP3A0

3/8–16 UNC 螺纹深 19.
7/16–14UNC 螺纹深 19.
安装泵时，n.8 M10 螺钉扭矩
设定为47 ± 3 Nm.

3/8–16 UNC thread depth 19.
7/16–14 UNC thread depth 19.
To mount the pump, n.8 M10 screws,
with a torque wrench setting fixed
at 47 ± 3 Nm.

出油口
OUTLET

进油口
INLET

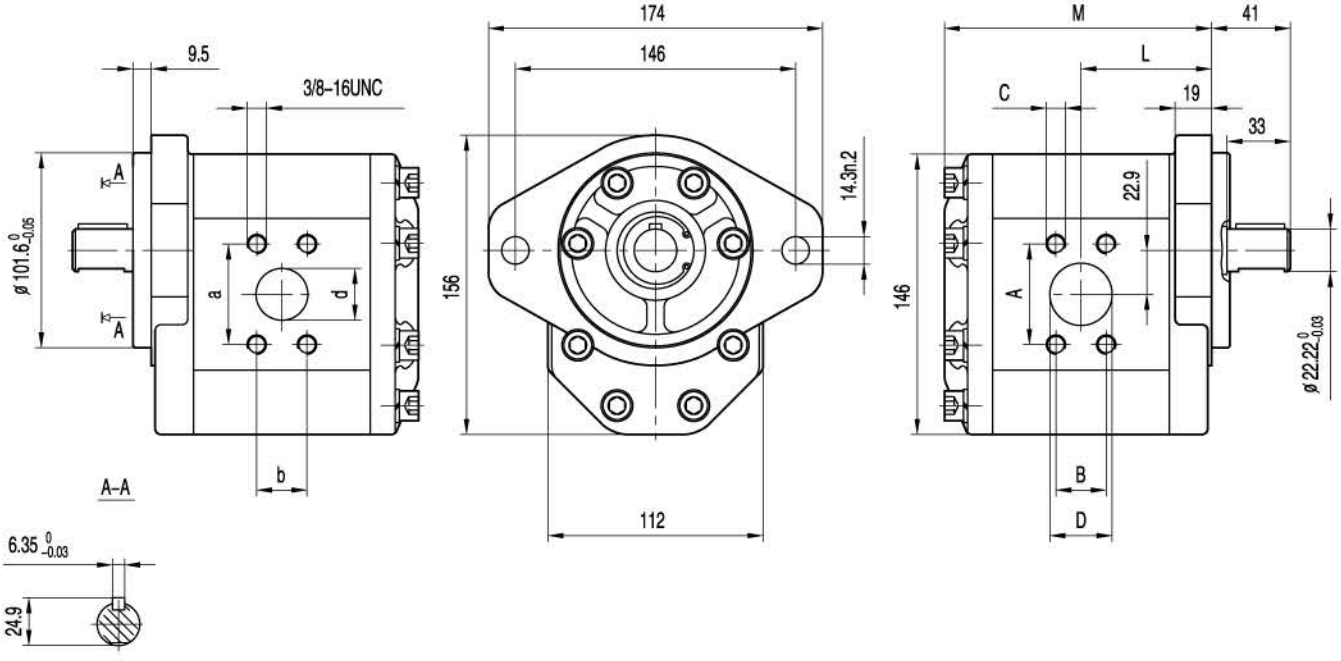

规格 Type	排量 Displacement	最大压力 Max pressure			最高转速 Max. speed	最低转速 Min. speed	尺寸 Dimensions								
		P1	P2	P3			M	L	A	B	C	D	a	b	d
	(cm^3/rev)	bar	bar	bar	(r/min)	(r/min)	mm	mm	mm	mm	UNC	mm	mm	mm	mm
BHP3A0-D-20	20	250	265	280	3500	600	128	63	52.4	26.2	3/8	27	47.6	22.2	19
BHP3A0-D-22	22	250	265	280	3500	600	130	64	52.4	26.2	3/8	27	47.6	22.2	19
BHP3A0-D-26	26	250	265	280	3000	600	133	65	52.4	26.2	3/8	27	47.6	22.2	19
BHP3A0-D-33	33	230	250	270	3000	500	139	68	52.4	26.2	3/8	27	47.6	22.2	19
BHP3A0-D-39	39	230	250	270	3000	500	146	72	52.4	26.2	3/8	27	47.6	22.2	19
BHP3A0-D-46	46	230	250	270	3000	500	152	75	52.4	26.2	3/8	27	47.6	22.2	19
BHP3A0-D-50	50	220	240	260	3000	500	156	77	52.4	26.2	3/8	27	47.6	22.2	19
BHP3A0-D-52	52	220	240	260	3000	500	158	78	52.4	26.2	3/8	27	47.6	22.2	19
BHP3A0-D-55	55	200	230	250	2800	400	160	79	58.7	30.2	7/16	33	52.4	26.2	27
BHP3A0-D-63	63	200	230	250	2800	400	168	83	58.7	30.2	7/16	33	52.4	26.2	27
BHP3A0-D-71	71	180	200	220	2500	400	175	86	58.7	30.2	7/16	33	52.4	26.2	27

BHP3A0

3/8–16 UNC 螺纹深 19.
7/16–14UNC 螺纹深 19.
安装泵时，n.8 M10 螺钉扭矩
设定为47 ± 3 Nm.

3/8–16 UNC thread depth 19.
7/16–14 UNC thread depth 19.
To mount the pump, n.8 M10 screws,
with a torque wrench setting fixed
at 47 ± 3 Nm.

出油口
OUTLET

进油口
INLET

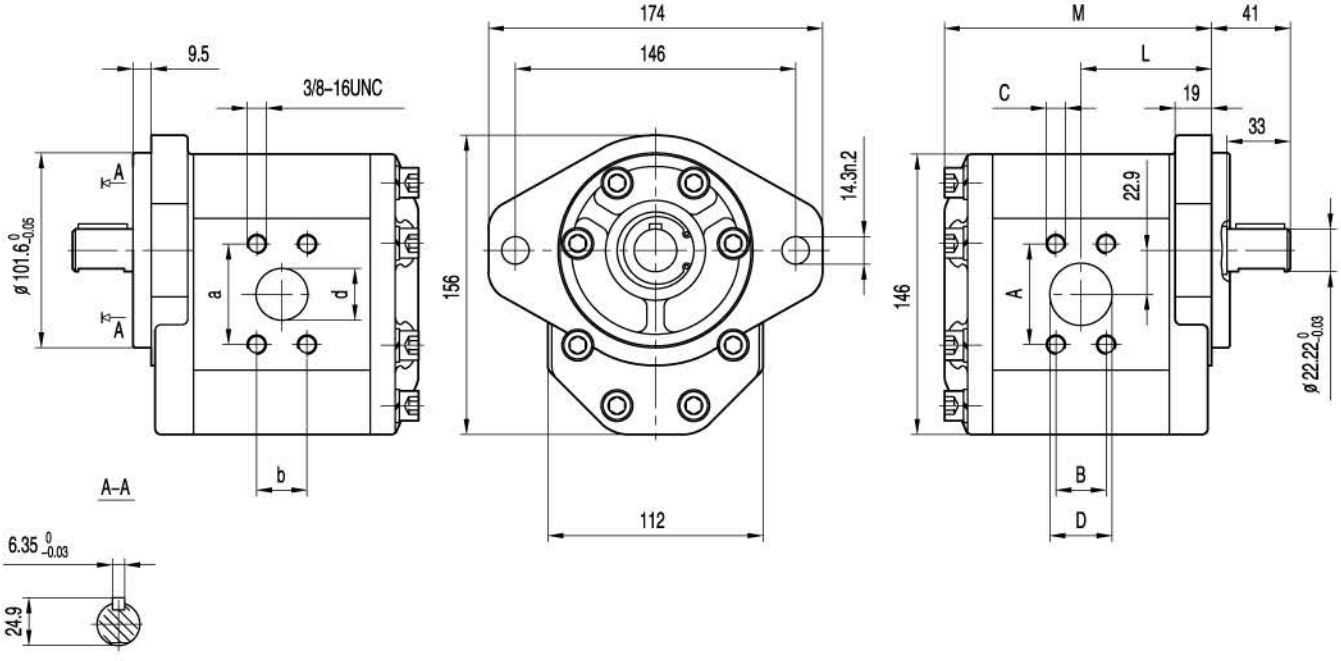

规格 Type	排量 Displacement	最大压力 Max pressure			最高转速 Max. speed	最低转速 Min. speed	尺寸 Dimensions								
		P1	P2	P3			M	L	A	B	C	D	a	b	d
	(cm^3/rev)	bar	bar	bar	(r/min)	(r/min)	mm	mm	mm	mm	UNC	mm	mm	mm	mm
BHP3A0-D-20	20	250	265	280	3500	600	128	63	52.4	26.2	3/8	27	47.6	22.2	19
BHP3A0-D-22	22	250	265	280	3500	600	130	64	52.4	26.2	3/8	27	47.6	22.2	19
BHP3A0-D-26	26	250	265	280	3000	600	133	65	52.4	26.2	3/8	27	47.6	22.2	19
BHP3A0-D-33	33	230	250	270	3000	500	139	68	52.4	26.2	3/8	27	47.6	22.2	19
BHP3A0-D-39	39	230	250	270	3000	500	146	72	52.4	26.2	3/8	27	47.6	22.2	19
BHP3A0-D-46	46	230	250	270	3000	500	152	75	52.4	26.2	3/8	27	47.6	22.2	19
BHP3A0-D-50	50	220	240	260	3000	500	156	77	52.4	26.2	3/8	27	47.6	22.2	19
BHP3A0-D-52	52	220	240	260	3000	500	158	78	52.4	26.2	3/8	27	47.6	22.2	19
BHP3A0-D-55	55	200	230	250	2800	400	160	79	58.7	30.2	7/16	33	52.4	26.2	27
BHP3A0-D-63	63	200	230	250	2800	400	168	83	58.7	30.2	7/16	33	52.4	26.2	27
BHP3A0-D-71	71	180	200	220	2500	400	175	86	58.7	30.2	7/16	33	52.4	26.2	27

BHP3

前盖/FRONT COVER

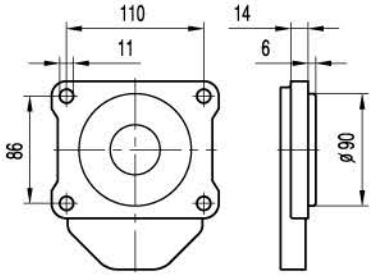

B0

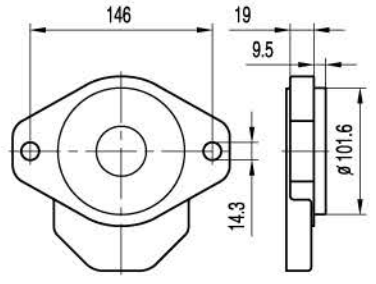

A0

轴伸/SHAFTS

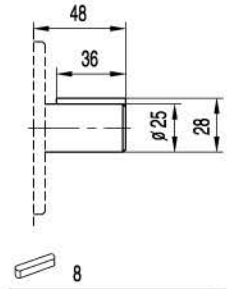

C0

最大扭矩 Max.Torque 450 Nm

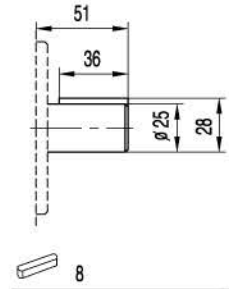

C1

最大扭矩 Max.Torque 450 Nm

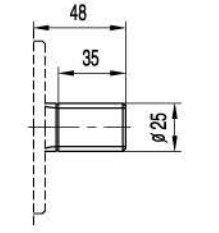

H0

最大扭矩 Max.Torque 500 Nm

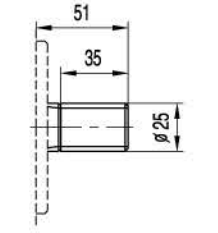

H1

最大扭矩 Max.Torque 500 Nm

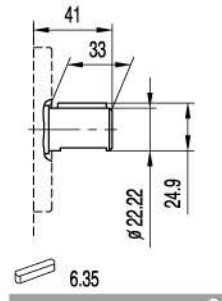

C2

最大扭矩 Max.Torque 400 Nm

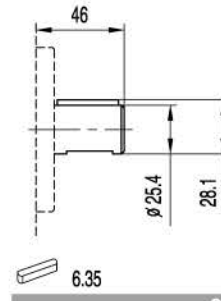

C3

最大扭矩 Max.Torque 450 Nm

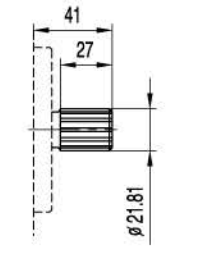

DP16/32-30° -13T

S0

最大扭矩 Max.Torque 500 Nm

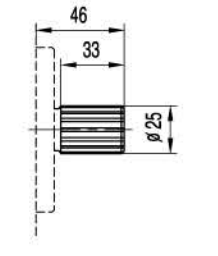

DP16/32-30° -15T

S1

最大扭矩 Max.Torque 600 Nm

BHP3

前盖/FRONT COVER

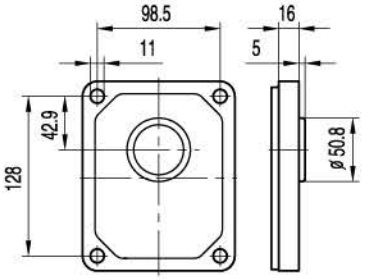

B1

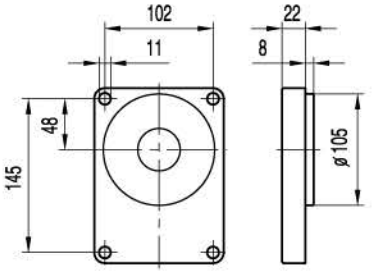

B2

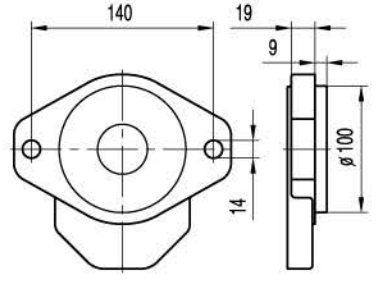

A1

轴伸/SHAFTS

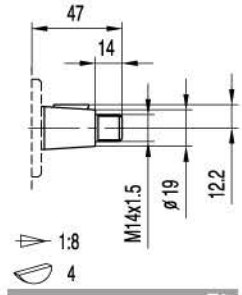

T0

最大扭矩 Max.Torque 300 Nm

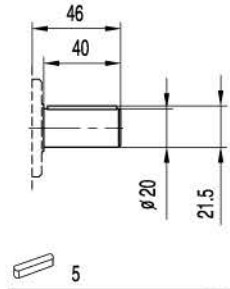

C4

最大扭矩 Max.Torque 350 Nm

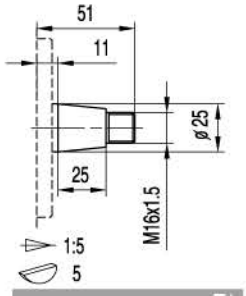

T1

最大扭矩 Max.Torque 350 Nm

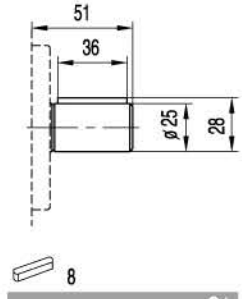

C1

最大扭矩 Max.Torque 450 Nm

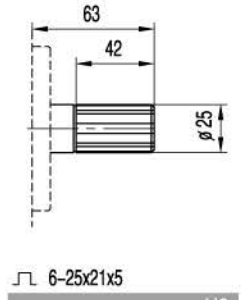

H2

最大扭矩 Max.Torque 500 Nm

BHP3

油口/PORTS

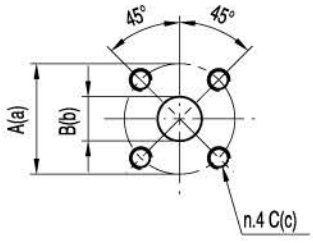

F0/F1/F2/F3

规格 TYPE	油口代号 PORTS CODE	进油口 INLET			出油口 OUTLET		
		A	B	C	a	b	c
BHP3...20 ÷ BHP3...26	F0	50	20	M8	50	20	M8
BHP3...33 ÷ BHP3...46	F1	65	25	M8	65	20	M8
BHP3...50 ÷ BHP3...71	F2	76	33	M10	76	25	M10
BHP3...50 ÷ BHP3...63	F3	76	33	M8	76	25	M8

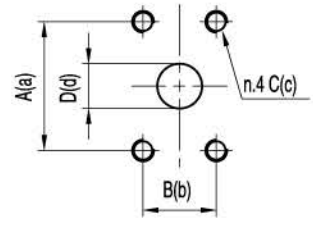

F4/F5

规格 TYPE	油口代号 PORTS CODE	进油口 INLET				出油口 OUTLET			
		A	B	C	D	a	b	c	d
BHP3...20 ÷ BHP3...52	F4	52.4	26.2	3/8–16UNC	27	47.6	22.2	3/8–16UNC	19
BHP3...55 ÷ BHP3...71	F5	58.7	30.2	7/16–14UNC	33	52.4	26.2	3/8–16UNC	27

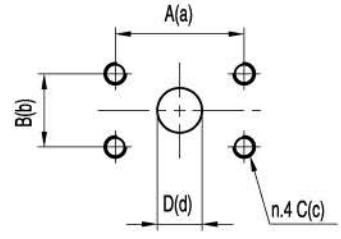

F6

规格 TYPE	进油口 INLET				出油口 OUTLET			
	A	B	C	D	a	b	c	d
BHP3...20 ÷ BHP3...25	57.2	26	M10	25	57.2	26	M10	20
BHP3...32	57.2	26	M10	30	57.2	26	M10	20
BHP3...40	57.2	26	M10	35	57.2	26	M10	20
BHP3...50 ÷ BHP3...63	57.2	26	M10	35	57.2	26	M10	25

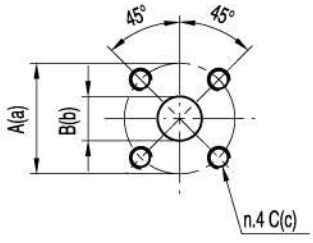

F7

规格 TYPE	进油口 INLET			出油口 OUTLET		
	A	B	C	a	b	c
BHP3...20 ÷ BHP3...71	55	27	M8	55	19	M8

BHP3

油口/PORTS

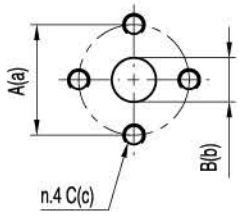

E0/E1/E2/E3

规格 TYPE	油口代号 PORTS CODE	进油口 INLET			出油口 OUTLET		
		A	B	C	a	b	c
BHP3...20 ÷ BHP3...39	E0	56	27	M10	56	19	M10
BHP3...46	E1	51	27	M10	51	27	M10
BHP3...50 ÷ BHP3...52	E2	56	27	M10	56	27	M10
BHP3...55 ÷ BHP3...71	E3	62	33	M10	51	27	M10

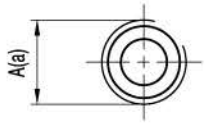

L0/L1/L2/L3

规格 TYPE	油口代号 PORTS CODE	进油口 INLET	出油口 OUTLET
		A	a
BHP3...20 ÷ BHP2...22	L0	G3/4	G3/4
BHP3...26 ÷ BHP2...39	L1	G 1	G3/4
BHP3...46 ÷ BHP2...63	L2	G1 1/4	G 1
BHP3...71	L3	G1 1/2	G1 1/4

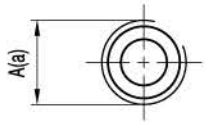

R0/R1/R2/R3

规格 TYPE	油口代号 PORTS CODE	进油口 INLET	出油口 OUTLET
		A	a
BHP3...20 ÷ BHP2...22	R0	PT3/4	PT3/4
BHP3...26 ÷ BHP2...39	R1	PT 1	PT3/4
BHP3...46 ÷ BHP2...63	R2	PT1 1/4	PT 1
BHP3...71	R3	PT1 1/2	PT1 1/4

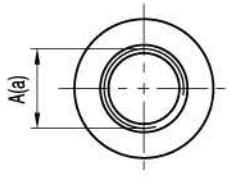

U0/U1/U2

规格 TYPE	油口代号 PORTS CODE	进油口 INLET	出油口 OUTLET
		A	a
BHP3...20 ÷ BHP3...33	U0	1 5/16–12UNF	1 1/16–12UNF
BHP3...39 ÷ BHP3...52	U1	1 5/8–12UNF	1 1/16–12UNF
BHP3...55 ÷ BHP3...71	U2	1 7/8–12UNF	1 5/16–12UNF